EGB-100 Series

Resettable Call Point Operation Manual (Blue Backlight & Built-in Buzzer)

- Operating voltage:12/24VDC (factory default 24VDC)
- Dimensions: 87x91x53 mm (with clear plastic cover)
- Contact resistance: 100mΩ
- Rating: Up to 5A 125/250 VAC
- Double pole (switch 1 (NC/COM/NO), switch 2 1A at 30VDC)
- Backlight illumination: Blue
- Built-in buzzer: 80dB
- Plastic case: Green / Red
- Resettable key included

Part Number:

EGB-100-G

Green **G**/Red **R**

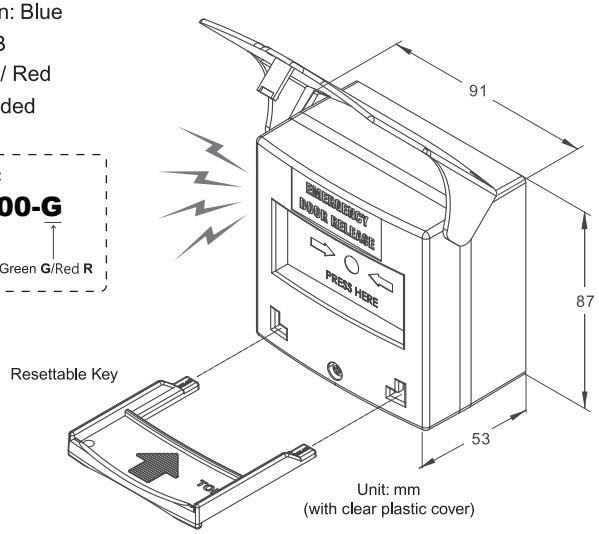

EGB-100 Series with Detachable Terminal Blocks

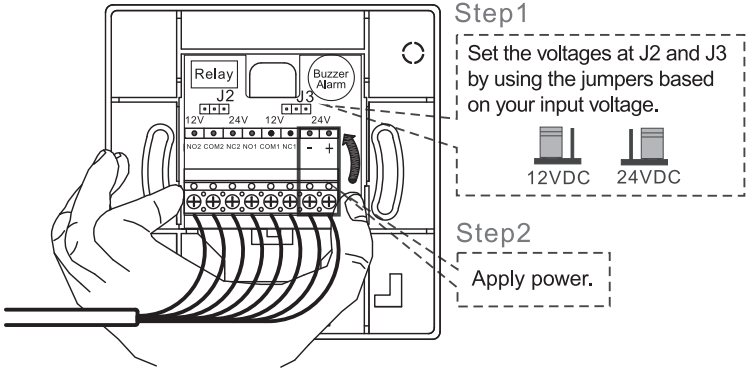

Caution:
Voltage settings for J2 and J3 must be the same. Failure to correctly set the input voltage will cause damage to the product.

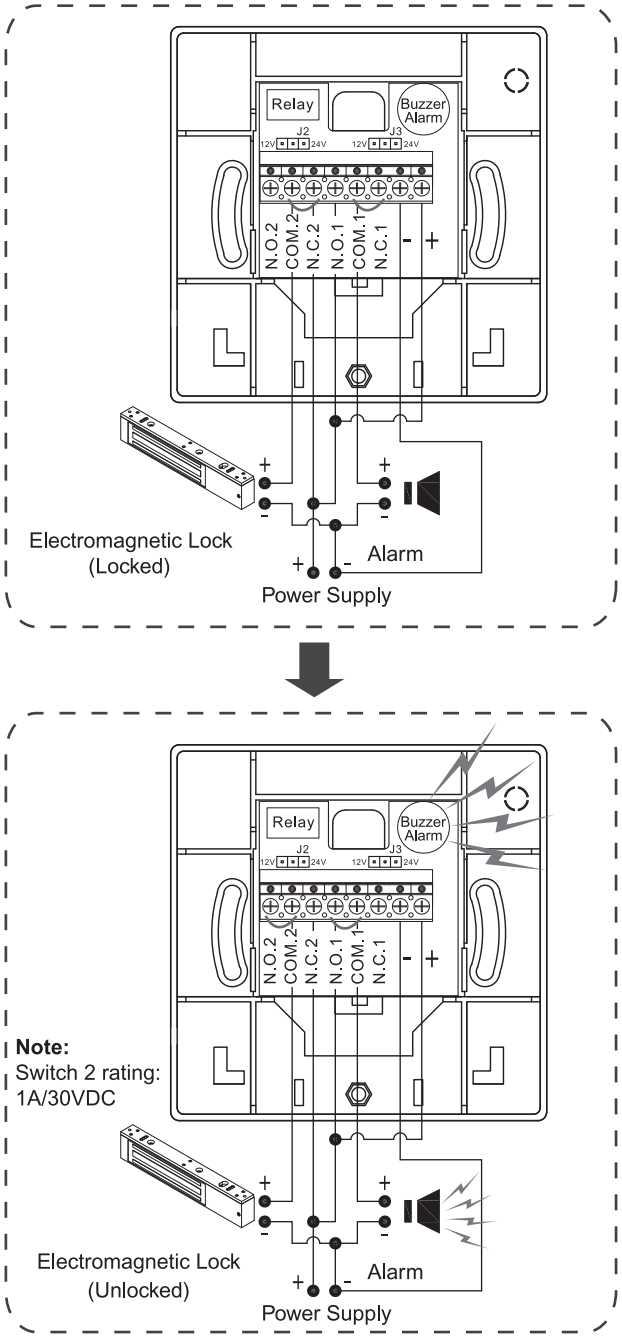

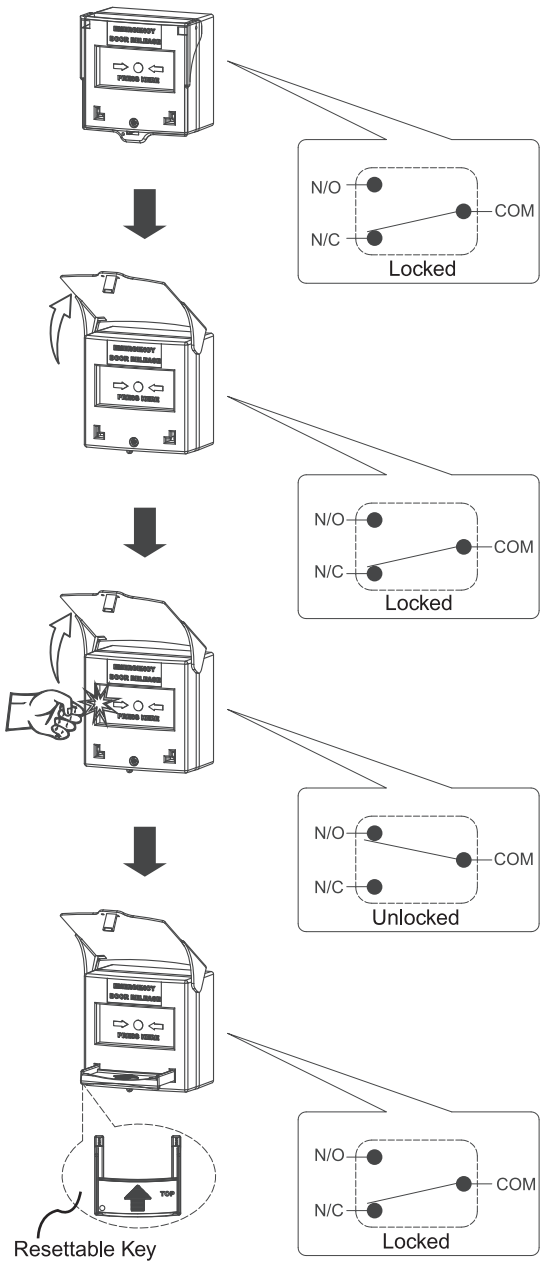

For details regarding the limited warranty:

Customer Service	
1-877-671-7011	www.allegion.com/us

ALLEGION

LOCKNETICS®

© Allegion 2017
47259488 Rev. 12/17-a